FINAL PROJECT REPORT/PRESENTATION

Presented by Ryan Bezerra, Ava Marshia, Alis Craig

PURPOSE

Our chosen LiPO battery monitor focuses on providing the following features:

- Displaying total battery voltage
- Displaying individual cell voltages.
- Alarming users audibly when any cell drops below a specific voltage.

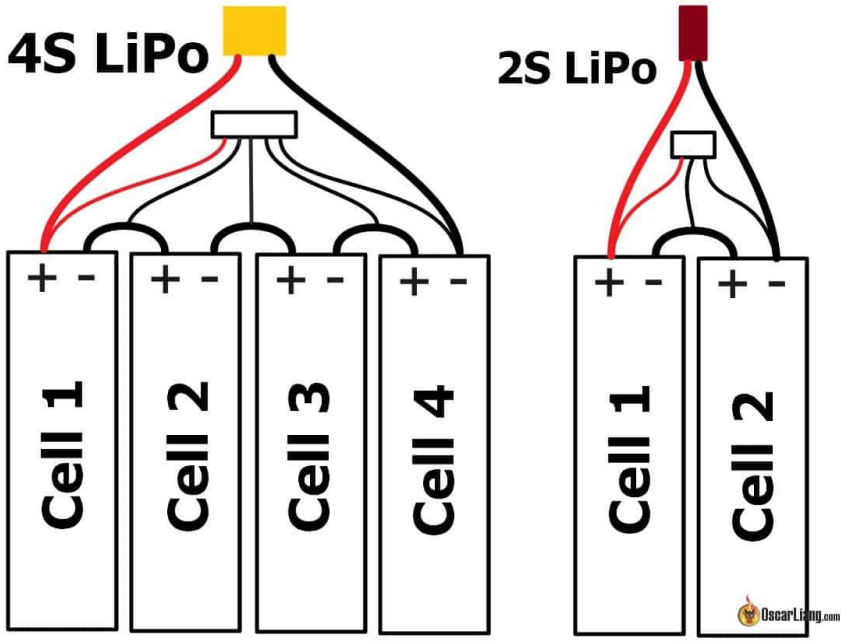

PINS – USING THE BALANCE LEAD

LiPo Battery monitors typically make use of what is known as the "balance lead“, which is connected to the cells of the battery.

For an **N-cell battery**, the balance lead will have **N+1 Pins**.

<u>Pin Layout</u>

Pin 0: Common Ground (-)

Pin 1: Cell 1 (+)

Pin 2: Cell 2 (2)

Pin N: continues for N cells.

The monitor is powered directly by the battery it is measuring, drawing a very small amount of current from the first few cells.

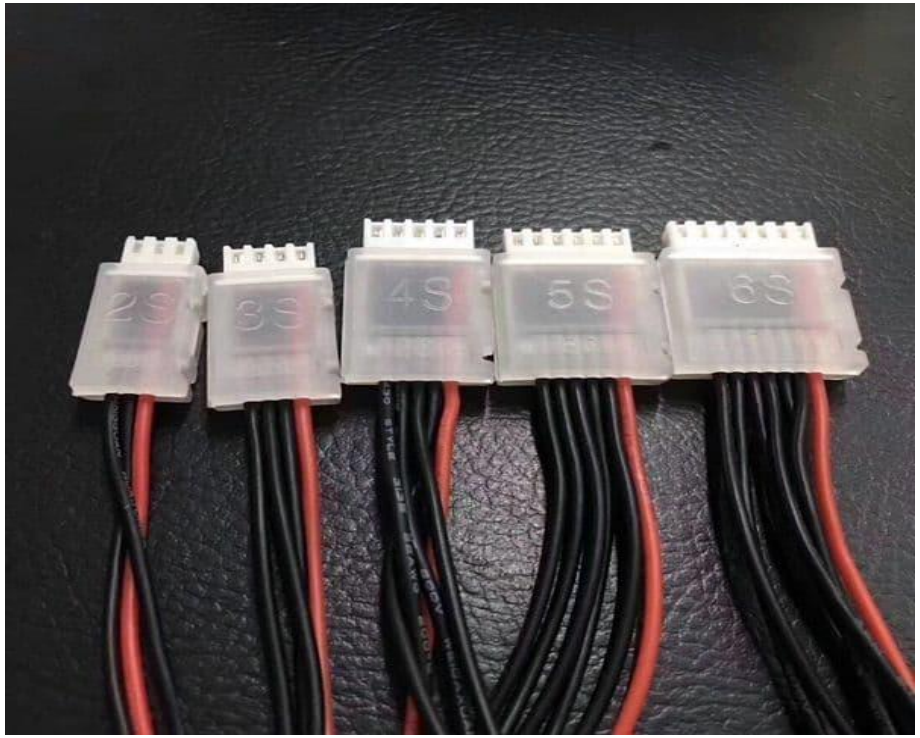

CORE HARDWARE COMPONENTS

MCU – A small microcontroller unit to process data, control the display, and sound the alarm.

ADC – Converts the analog voltage levels into digital values for the microcontroller.

Voltage Divider Circuits - Resistor networks that scale high battery voltages down to a range the ADC can safely read.

LED Display – 7-segment display used to show cell and total voltages.

Piezo Buzzers – Compact high-decibel buzzers used to alarm users of low voltages.

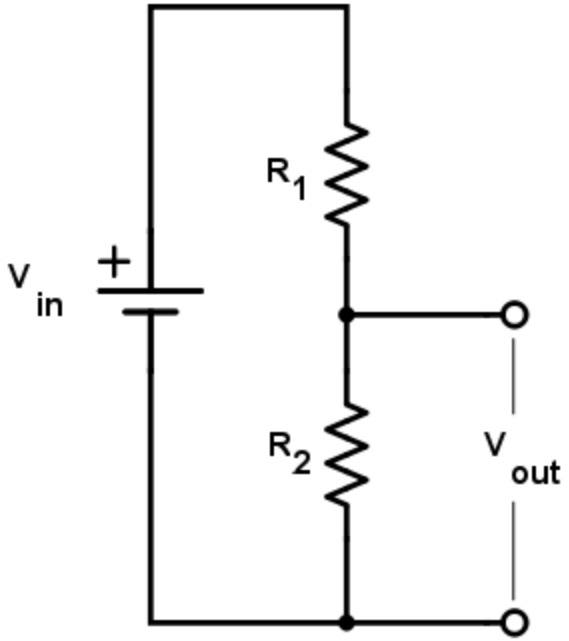

HOW VOLTAGE IS MEASURED (THE VOLTAGE DIVIDER)

- The microcontroller cannot directly read a 22.2V (6S) battery because it would damage the pins.
- The solution is for **each pin on the balance connector** to be connected to a voltage divider circuit.

<u>How it works:</u>

A voltage divider uses two resistors to create an output voltage that is a fraction of the input.

For a 30V maximum input, the resistors might be chosen to scale the output to 3V. The MCU then multiplies the digital reading by the known scaling factor to determine the real voltage.

MEASURING INDIVIDUAL CELLS

The device does not measure each cell in isolation.

It measures the voltage at every pin **relative** to the common ground.

<u>So for example:</u>

Step 1: Measure Pin 1 (V1) relative to ground. This is the voltage of Cell 1.

Step 2: Measure Pin 2 (V2) relative to ground.

Step 3 (Math is used): The firmware calculates the voltage of Cell 2 by subtracting V1 from V2 (Cell 2 = V2 - V1).

Then for every subsequent cell, this formula is used, up to 8 cells.

ALARM FUNCTIONALITY

- The monitor module has a button attached at the top of its assembly, that allows the user to select between a set amount of threshold voltages for the alarm to sound.

<u>They go as following (incrementing by .1 V)</u>

OFF (alarm disabled) >

2.7 V > 2.8 V > 2.9 V >

3.0 V > 3.1 V > 3.2 V >

3.3 V > 3.4 > 3.5 V >

3.6 V > 3.7 V > 3.8 V

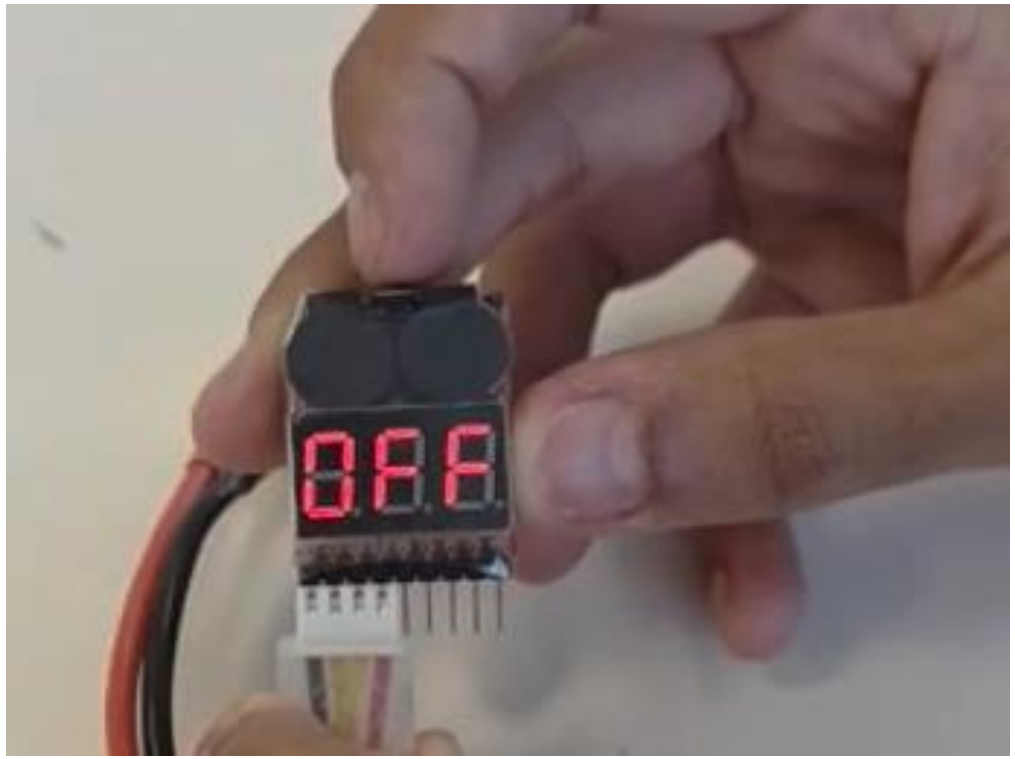

HOW THE ALARM IS CREATED (HARDWARE DRIVE)

Driving two loud buzzers requires more current than an MCU pin can typically provide.

- **Transistor Switch:** The MCU sends a signal to the base of a transistor (acting as an electronic switch).
- **Power Path:** When the transistor is "ON," it completes the circuit for the buzzers, allowing them to draw power directly from the battery.
- **Frequency:** The MCU may send a pulsed signal (PWM) to create the specific "beeping" tone of the piezo buzzers.

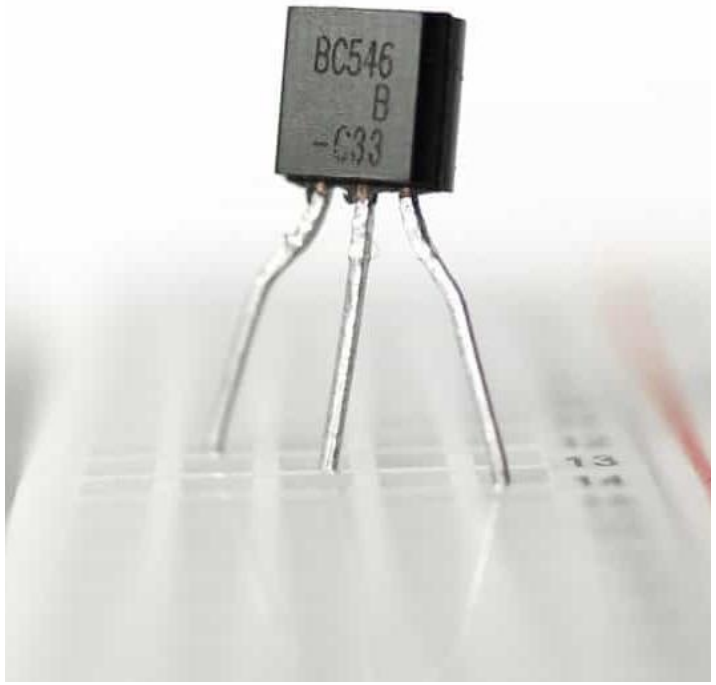

DISPLAY AND SEQUENCING

- **Multiplexing:** To save pins, the MCU uses a technique called multiplexing to drive the 3-digit display, turning each digit on and off so fast that the human eye sees them all as being on.
- **Data Cycling:** The display logic cycles through:
  - Total Voltage (marked by "ALL").
  - Cell 1 Voltage (marked by "No.1").
  - Cell 2 Voltage (marked by "No.2"), and so on.

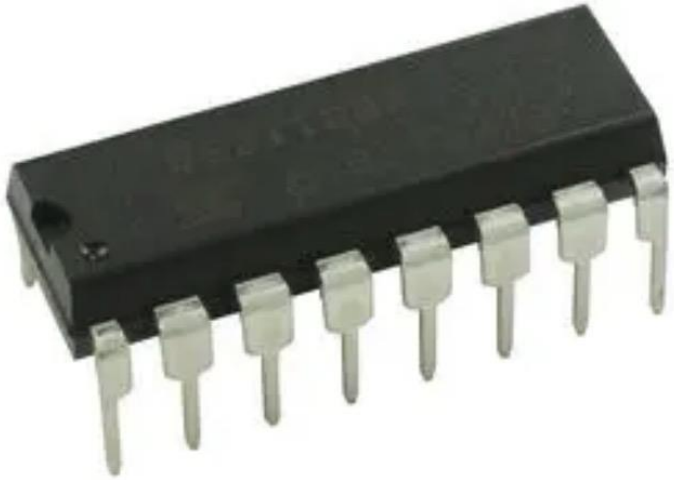

CONCLUSION

The 1-8S LiPo monitor is a simple but effective piece of engineering. By combining basic resistor math with a microcontroller, it provides a vital safety net for monitoring the life of expensive batteries. It is an essential tool for anyone working with multi-cell LiPo packs, as it provides both visual data and an audible warning that can prevent battery failure.